ALT-FLX AIRCRAFT ALTERNATOR INSTALLATION & INSTRUCTIONS FOR CONTINUED AIRWORTHINESS (ICA)

Aircraft Models:

See Approved Model List (AML) for STC SA11137SC

This ICA applies only to aircraft modified in accordance with STC SA11137SC.

The information contained in this ICA supplements or supersedes the basic airplane service manuals only in those areas outlined herein. For limitations, procedures and information not contained in this instruction, consult the basic aircraft, engine or propeller service manuals.

Affected Alternator P/Ns:

17-2000-1	**17-2000-4**
17-2000-2	**17-2000-5**
17-2000-3	

Refer to Table 1-1 for ALT-FLX kit P/N effectivity

© 2022 - Hartzell Engine Technologies - All rights reserved

RECORD OF REVISIONS

Revision Level	Issue Date	Page(s) Revised	Description
E	01/13/22	ALL	Full rewrite to ATA -100 & iSpec 2200 standards; Arranged to comply with FAA Order 8110.54A, Appendix A, Part 23; Approval via PCO-110892
F	4/25/22	1-6	Table 1, change engine make from CMI to LYC on ALT-FLX-6, -7, & -8; Approval via PCO-111178
G	11/14/22	-	Approval via PCO-111464
		1-6	Add heading 1.11 - Eligibility Table 1-1, add *Reference Only to Engine Make column; Table 1-1, add Case Mount and Boss Mount to applicable engine Application collumn; Heading 1.11, add para. A & B;
		1-7	Add Fig. 1-3 - Case Mount;
		1-8	Add Fig. 1-4 - Boss Mount.

© 2022 - Hartzell Engine Technologies - All rights reserved

THIS PAGE INTENTIONALLY LEFT BLANK

© 2022 - Hartzell Engine Technologies - All rights reserved

TABLE OF CONTENTS

AIRWORTHINESS LIMITATIONS A-1
A.1 General Information A-1
A.2 Airworthiness Limitations Statement A-1
A.3 Life Limits A-2
SECTION 1 - INTRODUCTION 1-1
1.1 General Information 1-1
1.2 General Specification (Instruction) 1-2
1.3 Measurements 1-2
1.4 Units of Measure 1-2
1.5 Abbreviations 1-3
1.6 Definitions 1-4
1.7 Disposal 1-5
1.8 Storage 1-5
1.9 Model Identification 1-5
1.10 Serial number Identification 1-5
1.11 Warranties 1-5
1.12 Eligibility 1-6
SECTION 2 - DESCRIPTION OF OPERATION 2-1
2.1 Description 2-1
A. General 2-1
B. Operational Data 2-1
C. Dimensions 2-1
2.2 Basic Component Description 2-1
2.3 Technical Purpose 2-1
2.4 Theory of Operation 2-1
SECTION 3 - TROUBLESHOOTING 3-1
3.1 General 3-1
3.2 Procedure 3-1
3.3 Alternator Belt Troubleshooting 3-1
SECTION 4 - CHECK 4-1
4.1 General 4-1
4.2 Inspection Checks 4-1

© 2022 - Hartzell Engine Technologies - All rights reserved

SECTION 5 - TESTING 5-1
5.1 General 5-1
SECTION 6 - INSTALLATION 6-1
6.1 General Installation, Alternator Replacement 6-1
A. Installation 6-1
6.2 Generator Replacement 6-3
A. R1224 Regulator Wiring 6-3

© 2022 - Hartzell Engine Technologies - All rights reserved

Thank you for purchasing a PlanePower* alternator. We encourage you to read this instruction thoroughly. It contains a wealth of information about how to properly install and maintain your alternator so that it may give you many years of safe and reliable service.

Should you have a question regarding your alternator that is not covered in this instruction, Hartzell Engine Technologies Product Support is ready to assist you. We may be reached at the following contact information:

Phone: +1.334.386.5400, option 2

E-mail: techsupport@Hartzell.aero

Fax: +1.334.386.5450

Web: www.Hartzell.aero/contact/

*PlanePower is a trademark of Hartzell Engine Technologies LLC

WARNING:

People who fly should recognize that there are various types of risks are involved in this activity; and they should take all precautions to minimize them, since they cannot be eliminated entirely. The alternator is an important component of the aircraft. An alternator failure could result in an unplanned landing or even more severe consequences creating an unsafe condition that may result in death, serious bodily injury, and/or substantial property damage. It is, therefore, essential that the alternator is properly maintained according to the recommended service procedures and monitored to detect impending problems before they become serious. Any unusual operation should be investigated and corrected, as it may be a warning of impending failure.

© 2022 - Hartzell Engine Technologies - All rights reserved

AIRWORTHINESS LIMITATIONS

A.1 General Information

CAUTION:

THE AIRWORTHINESS LIMITATIONS HEREIN ARE THOSE MANDATED BY HARTZELL ENGINE TECHNOLOGIES. THESE LIMITATIONS ARE THE MINIMUM REQUIRED TO MEET CONTINUED AIRWORTHINESS BUT MAY BE SUPERSEDED BY MORE STRINGENT REQUIREMENTS AS PUBLISHED BY THE FAA, AIRCRAFT, ROTORCRAFT OR OTHER MANUFACTURERS THAT USE THESE COMPONENTS IN THEIR APPLICATIONS. FAILURE TO OBSERVE THESE LIMITATIONS MAY COMPROMISE THE COMPONENT OR THE APPLICATION IT IS USED IN.

A.2 Airworthiness Limitations Statement

A. The Airworthiness Limitations section is FAA approved and specifies maintenance required under § 43.16 and § 91.403 of the Federal Aviation Regulations unless an alternative program has been FAA approved.

Airworthiness Limitation Revisions Log

Revision Number	Description of Revision

© 2022 - Hartzell Engine Technologies - All rights reserved

A.3 Life Limits

A. The FAA establishes specific life limits for certain component parts as well as the complete alternator. Such limits require replacement of the identified parts after a specified number of cycles or hours of use.

B. Additions of, or changes to, any life limit for alternator components will be noted in the Airworthiness Limitation Revision Log.

C. Life Limits

(1) Alternator models and their component parts affected by this manual currently do not have any life limited parts.

(2) There are no new (or additional) Airworthiness Limitation associated with this equipment.

© 2022 - Hartzell Engine Technologies - All rights reserved

SECTION 1 - INTRODUCTION

1.1 General Information

WARNING:

IMPROPER OR UNAUTHORIZED APPLICATIONS OF THE INFORMATION CONTAINED IN THE INSTRUCTION MAY RENDER THE AIRCRAFT OR THE COMPONENT UNAIRWORTHY AND RESULT IN LOSSES, DAMAGES, OR INJURY TO THE USER.

DO NOT USE OBSOLETE OR OUTDATED INFORMATION. PERFORM ALL INSPECTIONS OR WORK IN ACCORDANCE WITH THE MOST RECENT REVISION OF THE APPLICABLE AIRCRAFT/ENGINE SERVICE OR MAINTENANCE MANUAL. INFORMATION CONTAINED IN THESE INSTRUCTIONS MAY BE SIGNIFICANTLY CHANGED FROM EARLIER REVISIONS. USE OF OBSOLETE INFORMATION MAY CREATE AN UNSAFE CONDITION THAT MAY RESULT IN DEATH, SERIOUS BODILY INJURY, AND/OR SUBSTANTIAL PROPERTY DAMAGE.

The accuracy and applicability of this instruction has not been verified for any assembly, component or part not manufactured by Hartzell Engine Technologies LLC (HET). Any use of the instruction for other than its intended or implied purpose is prohibited. The use of the instruction for the purpose of performing any installation, maintenance, replacement, adjustment, or inspection of any assembly, component or part not manufactured by HET is not approved, endorsed, or sanctioned by HET.

This instruction has been approved by Hartzell Engine Technologies LLC as the proper methods and procedures that FAA or other airworthiness authority Certificated Repair Stations and A/P Mechanics should use in the inspection and maintenance of Hartzell Engine Technologies LLC alternators.

No liability will be assumed by Hartzell Engine Technologies LLC for actual, consequential, incidental or other types of damages directly or indirectly resulting from the unauthorized use of this instruction for other than its stated purposes.

The liability for use of the authorized data herein for the maintenance, or return to service is limited to the specific terms and conditions stated under the applicable Limited Warranty in effect for each piece part, component, assembly or whole unit sold by HET.

Because of the numerous modifications, Supplemental Type Certificates (STC), Parts Manufacturing Approvals (PMA), or Form 337 Field Approvals that may apply, it is the responsibility of the repairman, mechanic or maintenance facility to determine the proper engine or aircraft application of this alternator assembly. Please refer to the appropriate aircraft Type Certificate (TC), Supplemental Type Certificate (STC), aircraft equipment list, maintenance manuals, and/or Log Book entries for determination.

When performing installation, maintenance, replacement, adjustment, or inspection of any HET assembly, component or part, it is imperative that the latest revision of this instruction or other product support document be referenced. Reference the HET website to be sure you have the latest revision before performing any work. (http://www.hartzell.aero)

All reasonable attempts were made to make this instruction as complete and accurate as possible. If you have any questions, comments, corrections or require clarification of any information contained herein, please write to Hartzell Engine Technologies LLC, 2900 Selma Highway, Montgomery, Alabama, 36108 USA. TEL +1.334.386.5400, FAX +1.334.386.5410, or http://hartzell.aero/contact/.

© 2022 - Hartzell Engine Technologies - All rights reserved

1.2 General Specification (Instruction)

A. This instruction is written in the English language and follows guidelines outlined in ATA 100 standards. Principle units of measure used in this instruction are U.S. units with International System of Units (SI) in parentheses.

B. The ALT-FLX alternator models are considered herein.

C. All aircraft, rotorcraft, or engine applications are limited to the holder of the TC, STC, PMA or TSO and only at the date of that document publication or revision.

D. Only approved, competent persons with the necessary skills may do maintenance tasks described in this instruction. This may include a certified pilot doing “preventative maintenance” as defined in FAR 43, Appendix A, paragraph C with guidance from AC 43.12A of latest change.

E. This instruction describes maintenance on components as they are installed on aircraft and tasks that should be accomplished in a properly equipped service facility.

F. Maintenance tasks and subtasks are referenced in the instruction but will have no specific identification numbers.

G. The instruction contains: Description and operation, Troubleshooting, Instruction for Continued Airworthiness (ICA) and Maintenance information along with part numbers required for basic maintenance tasks.

H. Changes and updates to this instruction can be found at www.PlanePower.aero. Revisions will be tracked and recorded in the Record of Revisions section of this document.

1.3 Measurements

The measurements given in this instruction are taken from original manufacturing drawings.

1.4 Units of Measure

A. SI Units

A	Ampere
A · h	Ampere hours
g	Gram
N	Newton
N · m	Newton meter
V	Volt
°C	Degree Celsius
Ω	Ohm
W	Watt
Hz	Hertz
m	Meter
cm	Centimeter
kg	Kilogram

B. U.S. Units

ft	Foot
in	Inch
lb	Pound
lbf · in	Pound-force inch
lbf · ft	Pound-force foot
ºF	Degree Fahrenheit

© 2022 - Hartzell Engine Technologies - All rights reserved

C. Multiplying Prefixes

μ	Micro
m	Milli
k	Kilo
M	Mega
p	Pico

1.5 Abbreviations

A. The abbreviations given below are used in this instruction: (upper or lower case)

ACU	Alternator Control Unit
AFM	Aircraft Flight Manual
ALT	Alternator
ATA	Air Transport Association of America
CMI	Continental Motors, Inc.
DE	Drive End (housing)
DIA	Diameter
FAA	Federal Aviation Administration (USA)
FIG.	Figure
GAMA	General Aviation Manufacturers Association
ID	Inside Diameter
HET	Hartzell Engine Technologies LLC
LYC	Lycoming™
MAX	Maximum
MFR	Manufacturer
MIN	Minimum
NO.	Number
N/A	Not Applicable
OD	Outside Diameter
P/N	Part Number
PARA.	Paragraph
POH	Pilots Operating Handbook
REF.	Refer To
SRE	Slip Ring End (housing)

© 2022 - Hartzell Engine Technologies - All rights reserved

1.6 Definitions

A. This paragraph defines the warnings and notifications used in this instruction. **WARNINGS** place critical attention to use of tools, materials, procedures, or limitations, which must be followed without deviation to avoid injury to the technician or other persons. **CAUTIONS** place immediate attention to use of tools and procedures which must be followed to avoid injury, damage to equipment and/or facilities. **Notes** call attention to procedures which make the job easier.

B. The following are basic definitions of the terms used herein: (as related to this instruction)

ALTERNATOR: The complete unit which transforms rotational energy from a powerplant into electrical energy . At a given voltage, produces alternating current (AC) which is converted to direct current (DC).

ALTERNATOR CONTROL UNIT: Device which controls alternator functions on, off, regulation of high/low voltage, field current and output current.

BRUSH: Device for conducting current to the slip rings of the rotor. It is a composite carbon block which includes a spring, lead and contact.

BRUSH HOLDER: Device that retains multiple brush assemblies and is comprised of a holder, contacts, and terminals.

CONTINUITY: The continuous path for the flow of current in an electrical circuit.

EMI: Electro Magnetic Interference. A disturbance in the radio-frequency spectrum that is generated by an external source that affects electrical devices or circuits by electromagnetic induction, electrostatic coupling, or conduction.

FRONT HOUSING: Part of the external housing which contains the components of the alternator. This end has structure typically used for mounting. It may also be referred to as the Drive End Housing or D.E.

OPEN: Electrical term for a complete disruption of a conductive path in an electrical circuit. Will read infinite resistance.

REAR HOUSING: Part of the external housing which contains the components of the alternator. It may also be referred to as the Slip Ring End or S.R.E.

RECTIFIER: An electrical circuit used to convert AC into DC current. The rectifier is an arrangement of diodes that causes the current to flow in only one direction.

ROTOR: Rotating electro magnet used to create a magnetic field. SLIP RING: Device which provides a sliding contact surface for the brush assemblies. The slip rings are smooth surface copper “rings” pressed onto the rotor shaft.

STATOR: A stationary set of conductors wound in coils on an iron core.

TERMINALS: Studs, screws or other devices that provide connections for electrical power.

THROUGH BOLT: Special bolts which connect front and rear alternator housings.

© 2022 - Hartzell Engine Technologies - All rights reserved

1.7 Disposal

A. The alternator assembly is designed to allow for re-use of many alternator subassemblies and components. Disposal of unairworthy parts and assemblies as well as required replacement parts should be as follows: Rejected parts should be tagged and scrapped per FAA requirements. Any part deemed unairworthy must be rendered unusable prior to discard. Rectifiers and PCB components may be considered hazardous waste and should be discarded whole through your local hazardous waste management system.

1.8 Storage

A. If unused, the alternator has no special preservation procedures and should be stored in its original packaging in a clean and dry environment. No storage limits are applicable if stored properly.

B. If the alternator is installed and has been in service, follow the recommendations of the engine and aircraft manufacturer regarding storage and preservation.

1.9 Model Identification

A. See Table 1-1 for listed alternator models and their respective ALT-FLX and mounting kits.

1.10 Serial number Identification

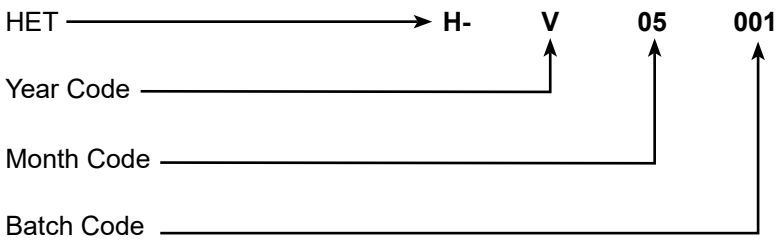

Example above: 2021, May, first unit of the month (batch). The year code advances one letter in alphabetical order for each succeeding year.

1.11 Warranties

A. Hartzell Engine Technologies LLC (HET) offers a Limited warranty with each new, overhauled, or rebuilt Alternator assembly or component (parts) it sells through it's distribution system. **NO expressed or implied warranty exists** when repairing, overhauling, or rebuilding any assembly or component using this instruction except as it may apply to any new HET replacement part purchased. If you suspect that any warranty applies to the Alternator assembly, it must be returned through an authorized HET distributor in a manner prescribed by that specific distributor. The affected Alternator must be received by the factory fully assembled and not altered in any way for disposition by

© 2022 - Hartzell Engine Technologies - All rights reserved

the HET warranty department. (**Warranty shall be denied for any alternator received altered, modified, or disassembled.**)

B. The HET Limited warranty policy in affect for your Alternator was delivered with the unit at the time of purchase. (As the Warranty policy is revised from time to time, you must check the policy delivered with your unit for specific terms and conditions should a warranty condition occur. If needed for reference, obtain the most current policy from the authorized HET distributor nearest you -or- visit our website at www.hartzell.aero.

1.12 Eligibility

A. Eligibility can be determined using the relevant AML or PMA supplement except in some cases where a Lycoming engine is installed. Lycoming engines changed the design of the crankcase and alternator mounting bracket in the 1960's; refer to Lycoming SL L220. The narrow deck cylinder engines use a "case mount" style bracket (Fig. 1-3) and the wide deck cylinder engines use a "boss mount" style bracket (Fig. 1-4). Because of this change, the same aircraft may use a different kit based on the mount style present.

B. To determine the kit required for Lycoming installations where either mount is allowed the mount style can be verified either by the engine serial number or by visually inspecting the engine. Narrow deck engine serial numbers end with two numeric characters, while wide deck engine serial numbers end with a letter; Refer to Lycoming Service Letter L220. Use table 1-1 to select the correct kit part number for the specific application.

Alternator P/N	ALT-FLX Kit(s) P/N	Mounting KIt P/N	Regulator P/N	Orientation*	Engine Make **	Application
17-2000-1	ALT-FLX-1	N/A	N/A	Normal	-	-
17-2000-2	ALT-FLX-2	17-9099	R1224B	Normal	CMI	-
	ALT-FLX-3	17-9099	N/A	Normal	CMI	-
17-2000-3	ALT-FLX-4	17-1089	R1224B	Normal	LYC	Case Mount
	ALT-FLX-5	17-1089	N/A	Normal	LYC	Case Mount
	ALT-FLX-6	17-1099	R1224B	Normal	LYC	Boss Mount
	ALT-FLX-7	17-1099	N/A	Normal	LYC	Boss Mount
17-2000-4	ALT-FLX-8	17-1099	N/A	Normal	LYC	Boss Mount
	ALT-FLX-10	17-1099-1	N/A	Normal	LYC	Boss Mount
17-2000-5	ALT-FLX-9	N/A	N/A	Right	-	-

Table 1-1 Affected Altenator List

* See Fig. 1-1 and 1-2
** Reference Only

© 2022 - Hartzell Engine Technologies - All rights reserved

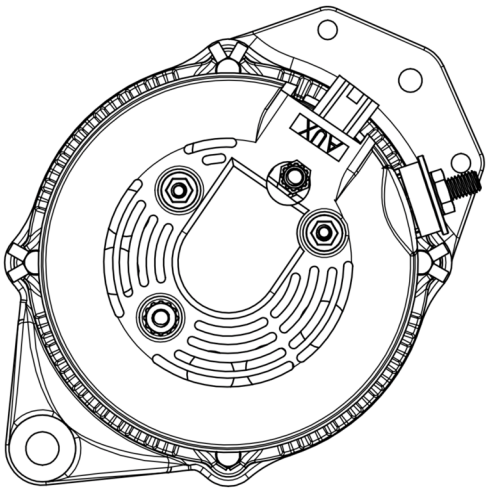

Fig. 1-1 - Normal Orientation

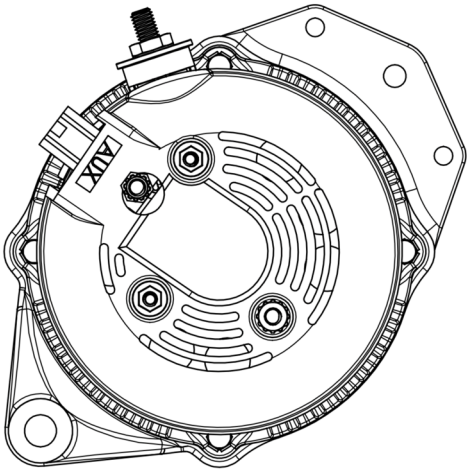

Fig. 1-2 - Right Orientation

Image Source:
Lycoming O, IO, HIO-360 Parts Catalog, pg. 5-3, Figure 22

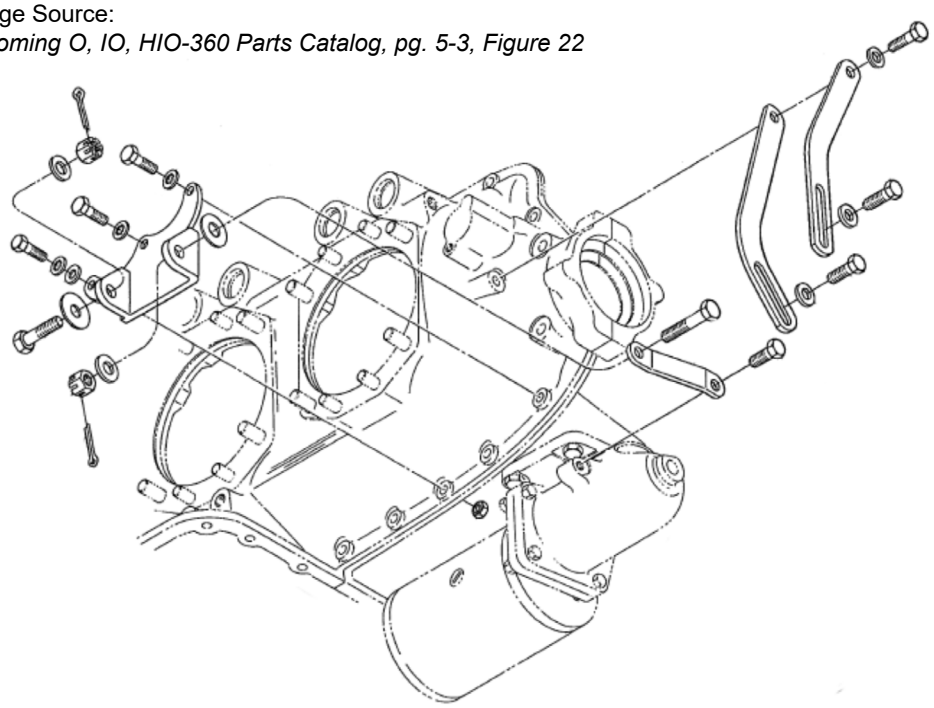

Fig. 1-3 - Alternator Case Mount

© 2022 - Hartzell Engine Technologies - All rights reserved

Image Source:
Lycoming O-360 Series Parts Catalog, pg. 5-4, Figure 28

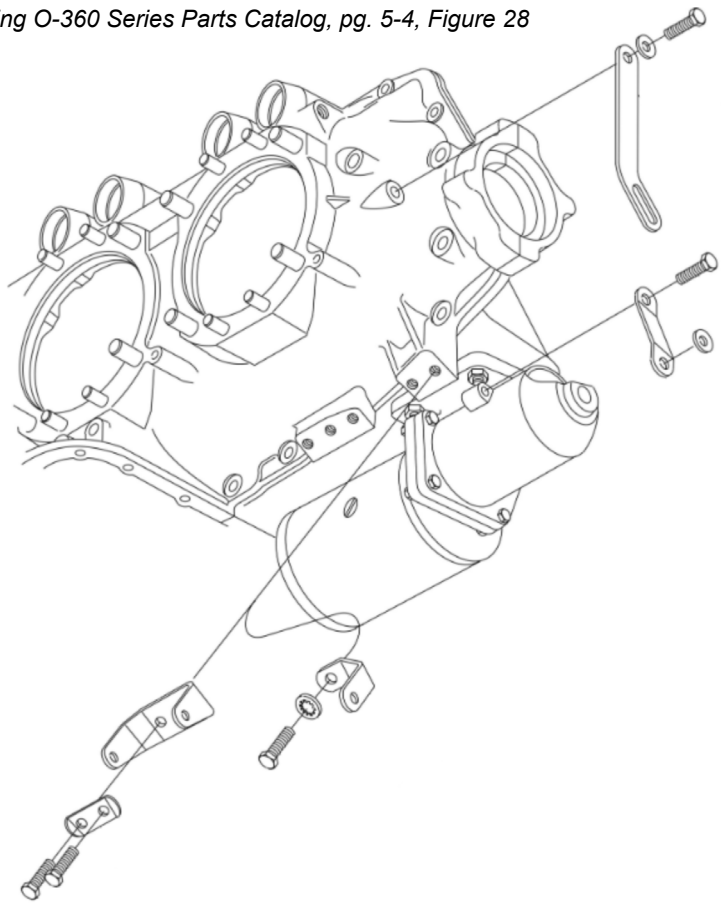

Fig. 1-4 - Alternator Boss Mount

© 2022 - Hartzell Engine Technologies - All rights reserved

SECTION 2 - DESCRIPTION OF OPERATION

2.1 Description

A. General

(1) Hartzell Engine Technologies (HET) belt driven alternators have been designed and constructed to provide extended periods of trouble-free operation with a minimum amount of maintenance. They are intended to withstand the vibration and extreme temperature changes encountered in aircraft applications.

B. Operational Data

Belt Driven	-
Air Cooled	-
12V Operating Speed:	1,200 RPM
12V Operating Output (Rated):	14 volts, 100 amps
24V Operating Speed:	2,000 RPM
24V Operating Output (Rated):	24 volts, 150 amps
Weight:	12.3 lbs

C. Dimensions

(1) The basic dimensions (in.) of the alternator are shown in Fig. 2-3 thru 2-5.

2.2 Basic Component Description

A. The principle components of the aircraft alternators described herein are the slip ring end housing assembly, the rectifier assembly, the stator, the rotor, the drive end housing assembly, and the brush holder assembly with spring and brushes.

2.3 Technical Purpose

A. The purpose of the alternator is to produce electrical energy. This energy is used to maintain the proper state of charge in the battery and supply current to the electrically powered equipment and accessories in the aircraft. It performs this function by converting mechanical energy derived from its rotating parts into electricity.

(1) The BATTERY is the source of electrical power whenever the BAT Master Switch is ON and is the source of power for starting the aircraft. Once started, the ALTERNATOR becomes the electrical power source whenever the engine is running and the ALT Switch is turned ON. (Control systems may vary with the aircraft/rotorcraft.)

2.4 Theory of Operation

A. Power to drive the alternator is derived from the aircraft powerplant by means of a belt for belt-driven type alternators. Torque is transmitted though the drive to the alternator rotor shaft resulting in rotor rotation.

© 2022 - Hartzell Engine Technologies - All rights reserved

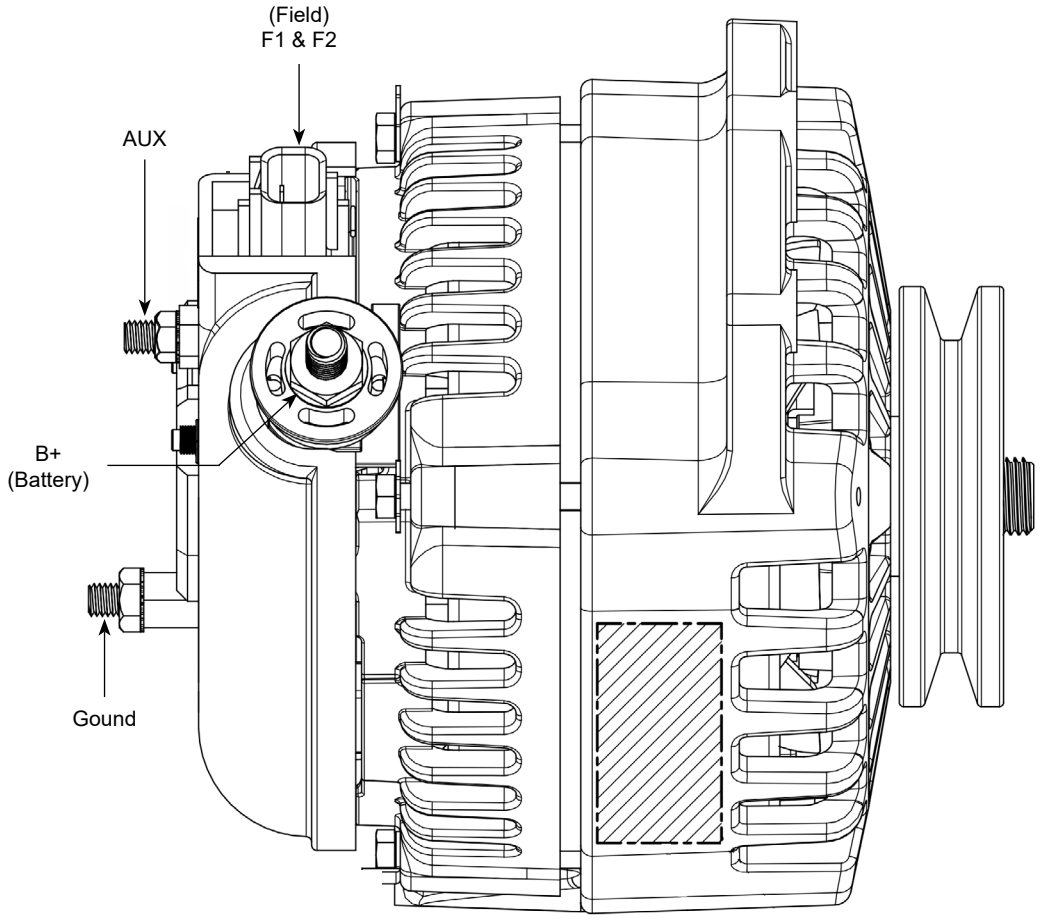

Fig. 2-1 - ALT-FLX Alternator - Typical

© 2022 - Hartzell Engine Technologies - All rights reserved

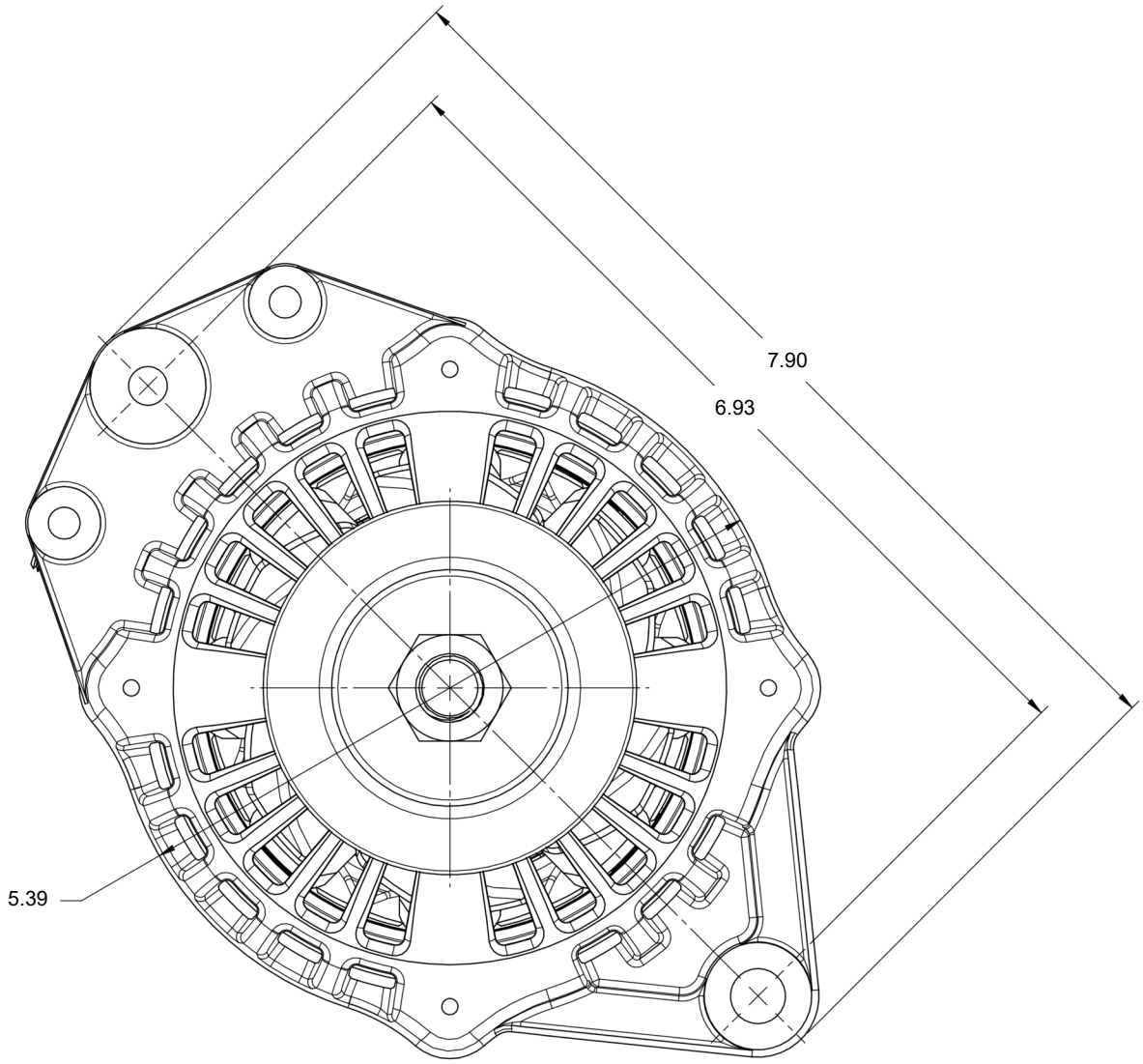

Fig. 2-2 - ALT-FLX Alternator - Front View

© 2022 - Hartzell Engine Technologies - All rights reserved

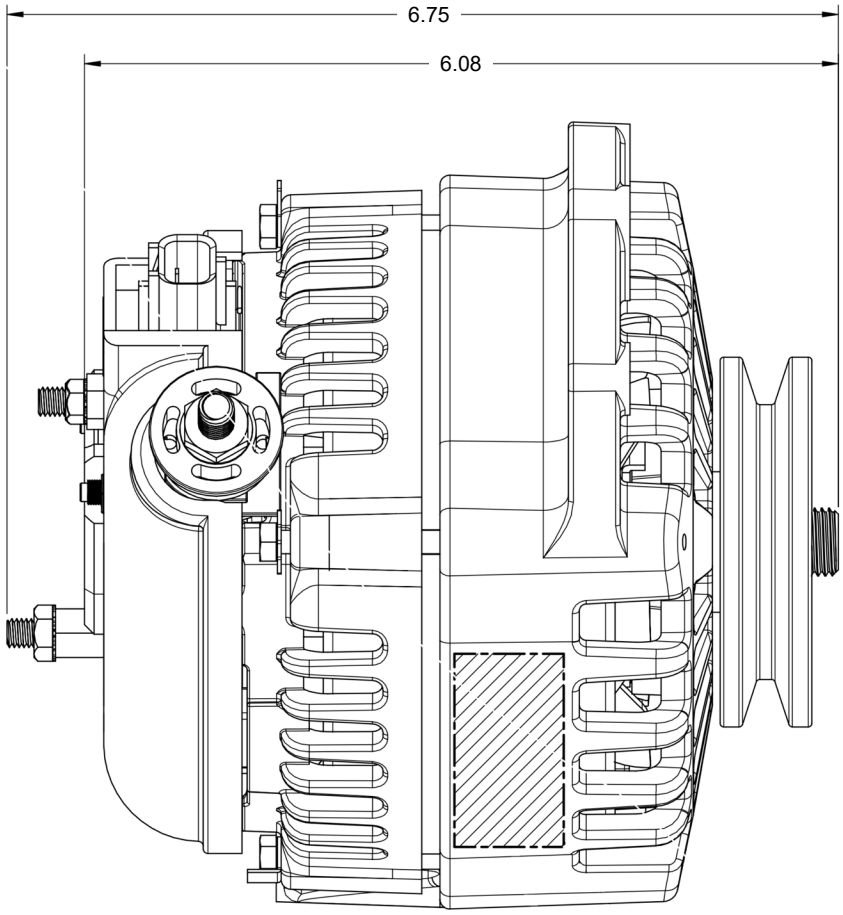

Fig. 2-3 - ALT-FLX Alternator - Side View 1

© 2022 - Hartzell Engine Technologies - All rights reserved

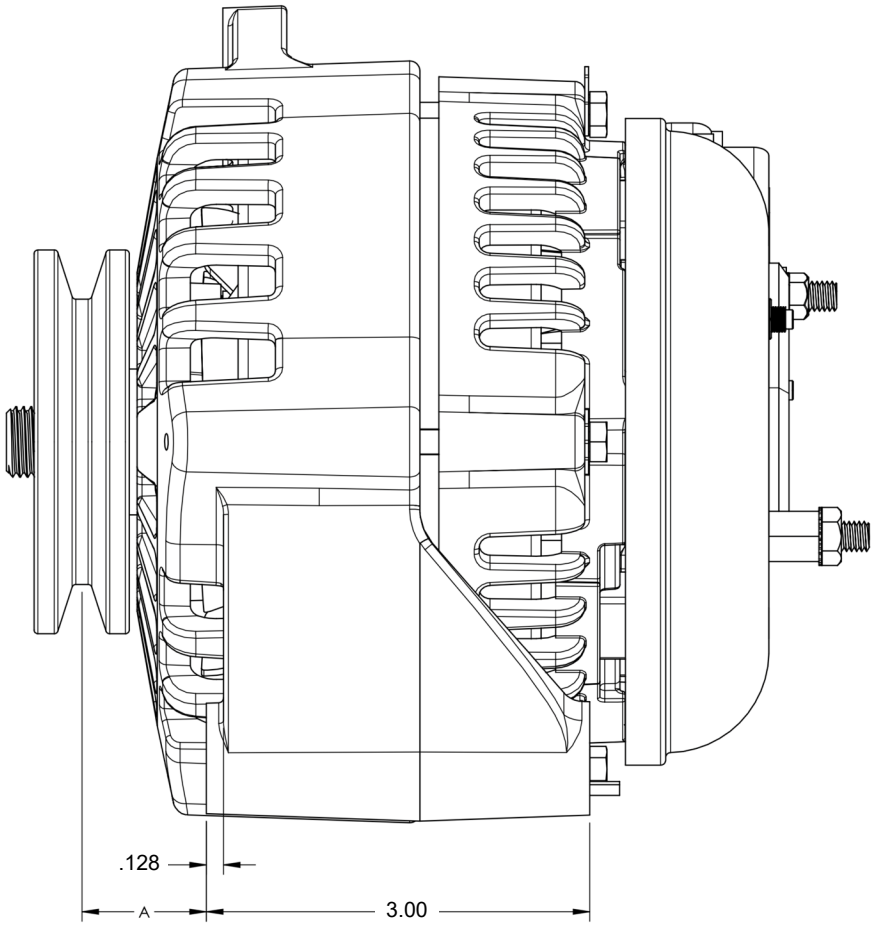

Fig. 2-4 - ALT-FLX Alternator - Side View 2

Detail A - Alternator Part Number/Dimension

17-2000-1	.969
17-2000-2	1.469
17-2000-3	.969
17-2000-4	.969
17-2000-5	.969

© 2022 - Hartzell Engine Technologies - All rights reserved

THIS PAGE INTENTIONALLY LEFT BLANK

© 2022 - Hartzell Engine Technologies - All rights reserved

SECTION 3 - TROUBLESHOOTING

3.1 General

A. In the event of malfunction in electrical power, it should not be assumed to be an alternator fault before employing proper troubleshooting procedures. The overall objective of trouble-shooting is to find the cause of trouble and take corrective action to prevent a recurrence. Even perfectly operational alternators cannot compensate for improper adjustments, corroded or worn parts, and improper installation, or lack of maintenance.

B. This section provides general troubleshooting procedures for the alternator assembly for unscheduled maintenance. It gives procedures to follow to determine the best course of action prior to disassembly.

3.2 Procedure

WARNING

WHEN SERVICING, REPAIRING, OR OVERHAULING THE ALTERNATOR, GREAT CARE AND CAUTION MUST BE TAKEN TO AVOID HAZARDOUS SITUATIONS. THE ALTERNATOR WHEN MOUNTED ON AN AIRCRAFT OR ROTORCRAFT, PRESENT A PHYSICAL HAZARD FROM PROPELLERS, ROTORS AND OTHER ROTATING DEVICES. THE ALTERNATOR PRODUCES A HIGH ELECTRICAL CURRENT OUTPUT AND ALSO PRESENTS AN ELECTRICAL SHOCK HAZARD, THAT CAN RESULT IN SERIOUS INJURY IF PROCEDURES IN THIS MANUAL OR THE AIRCRAFT/ROTORCRAFT SERVICE MANUALS ARE NOT FOLLOWED.

Note:

It is required to reference the aircraft or rotorcraft AFM or POH as well as the applicable service or maintenance manual as required.

3.3 Alternator Belt Troubleshooting

A. Although the alternator belt is provided by the airframe or engine manufacturer and those manufacturers normally issue manuals or instructions regarding their maintenance, the belt is fundamental to the operation of Hartzell Engine Technologies LLC (HET) alternator. As such, some general troubleshooting regarding the belt is offered here to prevent mis-diagnosis of what may seem to be an alternator fault.

B. Hartzell Engine Technologies new or overhauled alternators using belt drives are designed for two basic types of belts via custom pulley installations. The most common type is the single smooth V belt (large and small width) and the Poly-V belt type which has multi-V groves but is nearly flat. The basic function of these belts (either type) is to transfer rotational energy produced by the engine to various accessories that are needed for the aircraft.

C. The belt system or “drive” may be simple, running from the engine drive sheave to an alternator or it might be complex in not only running the alternator, but including the A/C compressor, hydraulic pump, or idler pulleys. Belt drives are efficient and safe. However, the more complex, the more difficult it is to align the “drive”. This troubleshooting will provide insight into both sound and visual inspection practices to identify a belt condition before moving on to the alternator or other component.

© 2022 - Hartzell Engine Technologies - All rights reserved

D. If an alternator is determined to be at fault, note that HET sells alternators with or without a pulley due to the desire of engine and airframe manufacturers to sometimes use their own custom pulley and belt arrangements. Unusual belt condition, low belt tension, belt contamination, and belt vibration are other sources of belt noise. A screech or squeal that occurs when starting or increasing engine RPM rapidly typically indicates a lack of tension so check belt tension. A tapping or grinding sound caused by debris imbedded in the drive side of the belt can be the cause and should be checked. Grinding noise can result from worn or damaged bearings which must be replaced (overhaul or replace alternator). This will eliminate the bearing noise and possible damage to the alternator. Mechanical noise from vibration can develop over time as drive components such as pulleys and spring tensioners (if used) wear beyond tolerance, as bearings wear, or as belts wear and stretch allowing brackets and attachments to loosen.

E. Specific belt noises may give clues to misalignment conditions. Noises can occur in both single V type and Poly-V type belts. The belt is less likely to generate misalignment noise when in new condition. As a belt wears, it will develop a smooth, glossy surface which will increase the possibility of noise. A wear condition will be accelerated if misalignment exists between any of the pulleys in the drive system.

F. A drive misalignment will make a “Chirp” noise in both the common V belt and the flat Poly-V belt. This is caused by entry of the belt contact surface into the pulley as the V(s) seat into the pulley groove there will be a chirp that is not repeated as the belt exits. The angle between belt surface and pulley is the critical factor responsible for causing the “chirp” from a misalignment. Misalignment angle can result from many different combinations of pulley positions. An in or out “positioning” error and/or an angular “tilting” error are two typical examples.

G. Misalignment noise is most likely to occur on the shortest span in a drive system, such as between two adjacent accessory pulleys. Proper pulley alignment is particularly critical in these locations. The common V belt pulley has a generally large groove while the nearly flat multi-groove pulley has very small grooves guiding the belt. both can have considerable misalignment and create the same noises.

H. Misalignment noise is generally loudest at idle speed and diminishes with increasing engine rpm, often vanishing higher RPM’s. The presence of high humidity (or a wet belt) often increases the likelihood for misalignment noise to occur.

I. Whenever the pilot notes belt noise, it is important to determine the type of noise and under what circumstances it occurs. Repairing a drive misalignment (chirp) is not likely to resolve a slip noise (squeal) that may be caused by insufficient tension.

(1) Check if the problem is more noticeable when starting and while the engine is cool (cool wet belt).

(2) Is the noise loudest at idle speed, or when accelerating the engine RPM (rapid changes in RPM speed can cause a belt to slip).

(3) Try to recreate the problem in the maintenance run area. If the noise is heard, use a spray bottle or other source of misting water and mist the belt lightly. If the noise level recedes or goes away for several seconds, then returns, the problem is most likely misalignment.

(4) If the noise immediately increases after the belt is sprayed, slipping is likely.

(5) If the water spray test is inconclusive and the noise remains unchanged, the problem is not likely related to drive alignment.

© 2022 - Hartzell Engine Technologies - All rights reserved

Refer to table 3-1 for a quick reference to troubleshooting alternator belt problems.

Problem	Possible Cause	Corrective Action
Belt Slippage	Lack of tension Overloaded drive Worn pulley or V grooves Oily drive conditions	Increase tension Reduce load or check pulley size Replace alternator Clean drive, resolve oil leak
Belt turn over	Misaligned drive Worn pulley or V grooves Heavy Impulse loads Excessive vibration Broken cords cause by prying belt over pulley Wrong pulley or belt	Realign shafts and pulleys Replace alternator Check idler pulley (spring or not) Check tension Tension v-belt, if tension is good, inspect belt condition or replace Replace Belts, do not pry belt over pulley Check to see if belt rides high or if belt bottoms out in groove
Rapid belt wear	Worn pulley grooves Pulleys misaligned Mismatched belts (Multi belts only) Belt slippage Pulley diameter too small Overloaded Drive	Replace alternator Align pulleys and brackets Replace mismatched belts Increase tension Check P/N and/or replace alternator Pulley size on components correct
Belt Separated	Foreign materials in drive belt Belt slippage (over time) Heavy start-up loads Belts damaged during installation	Check that pulley is protected Increase tension or replace belt Reduce load before starting Install new belts properly
Belt stretch	Excessive drive tension Broken cords using multiple belts Large Misalignment	Use proper tension Replace belts with matched set Realign brackets and pulleys
Belt squeal	Belt slippage Insufficient arc of contact Overloaded drive	Increase tension Increase center distance Pulley size on components correct
Belt chirp	Misaligned drive Belt tilted in pulley groove Belt riding on side of pulley groove	Align the pulleys and brackets Correct angle of belt Adjust bracket in or out of seat belt
Belt bottom cracks	High surrounding temperature Pulley diameter too small Belt slippage	Provide ventilation Check P/N and/or replace alternator Increase tension
Overheated bearings	Continuous belt slippage Excessive drive tension Bearings not lubed or are damaged	Increase tension Tension drive properly Replace alternator

Table 3.1 - Alternator Troubleshooting (Belt)

© 2022 - Hartzell Engine Technologies - All rights reserved

THIS PAGE INTENTIONALLY LEFT BLANK

© 2022 - Hartzell Engine Technologies - All rights reserved

SECTION 4 - CHECK

4.1 General

A. This section defines the various checks and inspections needed to assure reliable and safe operation of the alternator while in service. They are listed in hours time in service (TIS) or in calendar time, whichever is applicable and are the first to occur when offered a choice. Some maintenance is one time initial and others are recurring.

B. HET recommended maintenance and checks including TIS may be superseded by the aircraft or engine manufacturer's established time limits and schedules based on experience and/or unique requirements under engine or airframe Type Certificate.

4.2 Inspection Checks

50 Hours TIS & each 50 hours thereafter.

(1) Perform a check of the alternator assembly. Inspect the alternator mounting bracket and electical connectors for condition and security. Inspect alternator belts for condition, proper alignment, and tension.

100 Hours TIS & each 100 hours thereafter. (or each annual/event, the first to occur)

(1) Remove belt and turn alternator rotor by hand to check for grinding noises or rough running. Replace alternator if detected.

1000 Hours TIS. (or each 5 years, the first to occur)

(1) Remove field brush assembly per drawing 17-9999-1 and inspect brushes for wear. Replace brushes if brushes extend less than .250 from edge of brush holder case.

© 2022 - Hartzell Engine Technologies - All rights reserved

THIS PAGE INTENTIONALLY LEFT BLANK

© 2022 - Hartzell Engine Technologies - All rights reserved

SECTION 5 - TESTING

5.1 General

A. See Section 6, Installation, for test and check.

© 2022 - Hartzell Engine Technologies - All rights reserved

THIS PAGE INTENTIONALLY LEFT BLANK

© 2022 - Hartzell Engine Technologies - All rights reserved

SECTION 6 - INSTALLATION

If a FORD DOFF-series (Cessna 611501, 611502, etc. Grumman American DOFF-10300, etc.) Alternator is being replaced; the ALT-FLX will fit using all existing brackets, belt and hardware. Use ALT-FLX-1.

If a Prestolite, Chrysler, Delco or other alternator or a generator is being replaced; new brackets, tension arm and mounting hardware are required, see 17-0000.

If desired, the original alternator regulator may be replaced with a R1224 or R1224B regulator. If a generator is being replaced, the generator regulator must be replaced with a R1224 or R1224B regulator (the R1224B mounts using the same holes as most generator regulators). Remove the original regulator and install the R1224 or R1224B in the same location using the R1224 installation and wiring instructions. For Generator Conversions, wire the R1224 per the GENERATOR CONVERSION section of this document. Ensure that the R1224 or R1224B is set for the voltage matching that of the aircraft's electrical system.

MULTI-ENGINE INSTALLATIONS: For proper load-balancing operation, R1224 or R1224B regulators must be installed for each alternator and wired per the R1224 Installation Instructions (12-1001).

Reference applicable aircraft/engine maintenance manual and FAA AC43-13-1B for guidance on standard methods and practices for electrical, mechanical, and structural work on the aircraft. Follow all WARNINGS and CAUTIONS noted in the aircraft documentation related to the work being accomplished.

Electrical lug and splice sizes are given as a reference. Confirm on aircraft actual wire gauge and associated lug or splice before terminating wires.

6.1 General Installation, Alternator Replacement

A. Installation

Refer to Figure 6-1

(1) Use applicable aircraft/engine maintenance manual to gain access to the alternator.

(2) Label then remove wiring from the existing alternator. Remove the alternator.

(3) Cut the ring lug off of the wire removed from the F or F1 terminal (Field) of the original alternator. Connect the wire to EITHER white wire from the supplied 15-5050 Wire Harness/Plug using an M7928/5-4 environmental splice.

(4) If a second field wire (F2) was removed, connect it to the other white wire from the supplied 15-5050 Wire Harness/Plug using an M7928/5-4 environmental splice. If no separate field wire (F2) was removed, connect the remaining white wire from the supplied 15-5050 Wire Harness/Plug to the elevated post (ground) on the rear of the ALT-FLX using an M7928/1-42 lug and torque 20-35 lbf · in.

(5) If an AUX wire was removed from the original alternator (generators will not have one) connect it to AUX terminal of the ALT-FLX with an M7928/1-43 ring lug. Hold the AUX post with a wrench and torque the AUX post nut to 20-35 lbf · in. If an R1224 or R1224B regulator is being installed and there was not an AUX wire, connect a new wire (minimum 20AWG per MIL-W-22759/16) to the ALT-FLX AUX terminal using a ring lug. Route this wire to the location that the regulator is being installed.

(6) If a separate ground wire (- or GND) was removed from the original alternator or generator, reconnect it to the elevated post (ground) on the rear of the ALT-FLX. Hold the ground post with a wrench and torque the ground post nut to 20-35 lbf · in. If it is needed to terminate the wire due to lug size, remove existing lug, and terminate with M7928/1-42 lug.

© 2022 - Hartzell Engine Technologies - All rights reserved

(7) Place the ring lug of the “+” wire (large output wire), and any other wires removed from the output (+) terminal of the original alternator or generator on the M8 output bolt of the ALT-FLX. Torque the M8 nut to 45-50 lbf · in. If currently installed ring lug is not sized for a M8 stud, remove existing lug and terminate with an M7928/1-44 lug. Similarly modify all other existing wires attached to the “+” post of the original alternator or generator.

(8) Tension the belt and torque the adjusting bolt to 200 lbf · in and safety with stainless steel 0.032” diameter safety wire. Refer to appropriate engine and airframe service manuals for belt tension and other torque values. Safety wire other drilled mounting bolts.

(9) Start the aircraft and check the alternator output for proper operation.

(10) Recheck and inspect the entire installation. Complete FAA Form 337, make the appropriate log book entry, update the aircraft equipment list and revise the weight and balance if necessary.

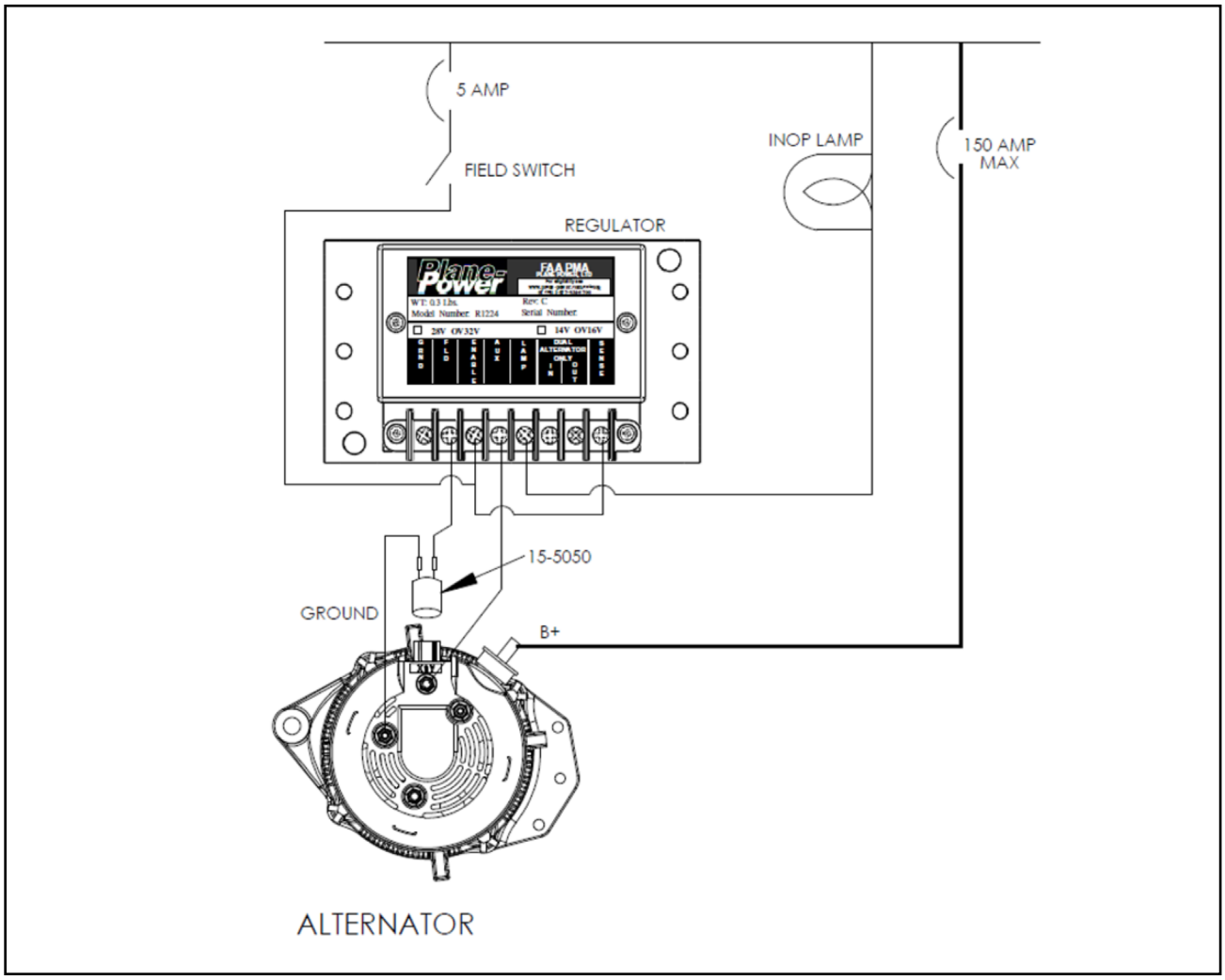

Figure 6-1 - Regulator Wiring Diagram

© 2022 - Hartzell Engine Technologies - All rights reserved

6.2 Generator Replacement

If the aircraft **does not** have a circuit breaker or current limiting device in the output and regulator input circuit, they **must** be installed. See “FIELD SWITCH” in Figure 6-1.

A. R1224 Regulator Wiring

Refer to Figure 6-1

(1) Use applicable aircraft/engine maintenance manual to gain access to the generator.

(2) Label then remove wiring from the generator. Remove the generator.

(3) If not already in place, install and label an alternator Field switch and a 5 amp fuse or circuit breaker in the panel. Connect the input of the circuit breaker to the positive bus and the output to the ENABLE terminal of the R1224.

(4) Wire the system as follows, following the R1224 Installation Instructions for additional information:

(a) Install a R1224 or R1224B alternator voltage regulator in the same location from which the generator regulator is removed. Ensure regulator voltage setting matches airframe electrical system.

(b) Connect the field terminal on the voltage regulator to EITHER white wire from the supplied 15-5050 Wire Harness/Plug using a connector per M7928/1.

(c) Connect the other white wire from the supplied 15-5050 Wire Harness/Plug to the elevated post (ground) on the rear of the ALT-FLX using a ring lug per M7928/1.

(d) Hold the ground post with a wrench and torque the ground post nut to 20-35 lbf · in.

(e) If the aircraft has a “Generator Inoperative” indicator lamp rated at 100mA or less, it may be used. If a lamp is not currently installed or is not compatible, install an appropriate lamp per MS18235 in the panel with placards in view of the pilot. Wire one lead of the lamp to the positive bus and the other to the R1224 LAMP terminal. Use minimum 20AWG wire per MIL-W-22759/16. If a separate ground wire (- or GND) was removed from the original generator, reconnect it to the elevated post (ground) on the rear of the ALT-FLX. Hold the ground post with a wrench and torque the ground post nut to 20-35 lbf · in. If it is needed to terminate the wire due to lug size, remove existing lug, and terminate with M7928/1-42 lug.

(f) Connect the AUX terminal of the ALT-FLX to the regulator AUX terminal. Use minimum 20AWG wire per MIL-W-22759/16.

(g) Connect the GND terminal of the regulator to aircraft ground. Use minimum 18AWG wire per MIL-W-22759/16.

(h) Jumper the regulator SENSE and ENABLE terminals. Recheck and inspect the entire installation.

(i) For multi-engine installations, refer to the R1224 Installation Instructions (12-1001) for additional wiring.

(j) Place the ring lug of the “+” wire (large output wire) on the M8 output bolt of the alternator. Torque the M8 nut to 45-50 lbf · in. If currently installed ring lug is not sized for a M8 stud, replace with M8 ring lug per AS7928.

(k) Start the aircraft and check the alternator output for proper operation.

(l) Recheck and inspect the entire installation. Complete FAA Form 337, make a log book entry, update aircraft equipment list, and revise the weight and balance as necessary.

© 2022 - Hartzell Engine Technologies - All rights reserved

THIS PAGE INTENTIONALLY LEFT BLANK

© 2022 - Hartzell Engine Technologies - All rights reserved